REVISIONS				
REV	DESCRIPTION	BY	ECO	DATE
A	NEW RELEASE	F.M.	0102075	9/9/2014

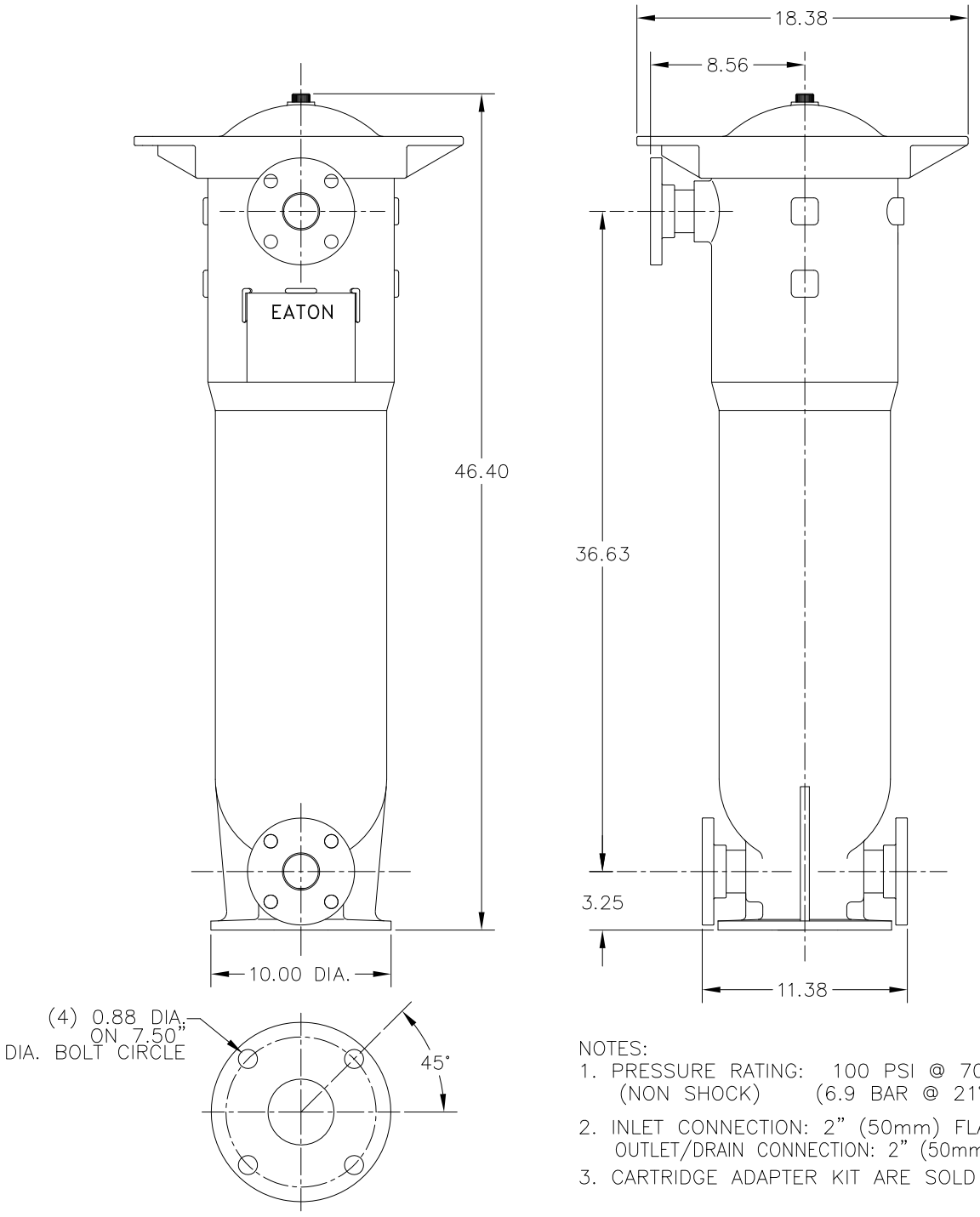

NOTES:
1. PRESSURE RATING: 100 PSI @ 70° F (NON SHOCK) (6.9 BAR @ 21° C)
2. INLET CONNECTION: 2" (50mm) FLANGE
   OUTLET/DRAIN CONNECTION: 2" (50mm) FLANGE
3. CARTRIDGE ADAPTER KIT ARE SOLD SEPARATELY.

CUSTOMER INFO	
NAME	
P.O. NO.	
TAG NO.	
S.O. NO.	
PART NO.	CFLT5202F

DRAWN BY	F.M.
SCALE	AS DRAWN
RESTRICTION	RESTRICTED
SHEET	1 OF 1
PROJECTION	THIRD ANGLE

HYDRAULICS GROUP
FILTRATION DIVISION
GALESBURG, MICHIGAN, USA • TINTON FALLS, NEW JERSEY, USA

TITLE
POLYLINE CARTRIDGE FILTER
2" FLANGE PVDF

DATE	SIZE	DWG FILENAME	REV
09/09/14	A	SD021400	A

EATON CORPORATION – CONFIDENTIAL AND PROPRIETARY NOTICE TO PERSONS RECEIVING THIS DRAWING AND/OR TECHNICAL INFORMATION
THIS DOCUMENT, INCLUDING THE DRAWING AND INFORMATION CONTAINED THEREON IS CONFIDENTIAL AND IS THE EXCLUSIVE PROPERTY OF EATON AT ANY TIME. BY TAKING THE POSSESSION OF THIS DOCUMENT THE RECIPIENT ACKNOWLEDGES AND AGREES THAT THIS DOCUMENT CANNOT BE USED IN ANY MANNER ADVERSE TO THE INTEREST OF EATON AND THAT NO PORTION OF THIS DRAWING MAY BE COPIED OR OTHERWISE REPRODUCED WITHOUT THE PRIOR WRITTEN CONSENT OF EATON, IN THE CASE OF CONFLICTING CONTRACTUAL PROVISIONS, THIS NOTICE SHALL GOVERN THE STATUS OF THIS DOCUMENT.
2014 EATON CORPORATION – ALL RIGHTS RESERVED.